C.A.Technologies

CPR -FE

PRESSURE FEED SPRAY GUN
PRODUCT INFORMATION

CAT Pressure Reduced

The CPR-FE gun comes equipped with both a pressure reduced air cap 23-2101 and a HVLP air cap 23-1301 for areas requiring HVLP compliance.

23-2101 - consumes 11 cfm at 29 psi gun inlet.

23-1301 - consumes 13.5 cfm at 29 psi gun inlet.

23-2101 pressure reduced air caps can be used with the 0.8 mm - 1.7 mm fluid orifices listed below.

23-1301 HVLP air caps can be used with the full range of fluid orifices listed below.

HVLP/PRESSURE REDUCED AIR CAP AND FLUID NOZZLE CHART

MODEL NO.	AIR CAPS	FLUID TIP RANGE	*MAX GUN INLET PRESS. FOR HVLP	FAN CONTROL	SCFM @ MAX GUN INLET	STANDARD IN CAT PACK	AVAILABLE FLUID NOZZLES TIPS	NEEDLES / marking on needle
CPR-FE	23-2101 CPR (Pressure Reduced)	0.8 - 1.7	29*	60-1317	11	Included	33-0208 0.8mm (.022")	40-1808 (08)
							33-0210 1.0mm (.040")	40-1810 (1810)
							33-0212 1.2mm (.046")	40-1812 (1812)
						Included	33-0213 1.3mm (.052")	40-1813 (1813)
	23-1301 (HVLP)	0.8 - 17	29*		13.5		33-0214 1.4mm (.055")	40-1814 (1814)
							33-0215 1.5mm (.059")	40-1815 (1815)
						Included	33-0217 1.7mm (.070")	40-1817 (1817)

Actual fluid nozzle and air cap combinations are determined by application (see application chart page 4)

*Note: Air cap test gages are available to confirm HVLP compliance.

*Gun inlet pressures may vary as required by application

CET

DISTRIBUTED BY COATING EQUIPMENT TECHNOLOGY, INC

PHONE: 586-210-0555

WEB: www.cetinc.com

Operation and Maintenance Instructions for *CPR-FE* Spray Guns

Operation

1. Connect air supply hose at handle of gun.
2. Connect a pressurized fluid supply to the gun fluid inlet.
3. Fluid flow can be controlled using the fluid control knob, this restricts flow by limiting needle travel. It is best to control fluid flow by proper selection of fluid orifice size and use the fluid control knob to “fine tune flow rate”.
4. Fan width can be adjusted using the fan control knob. Turning the knob clockwise narrows the fan.

Maintenance

IMPORTANT! Routine cleaning and maintenance is essential to insure proper gun operation.
Several states prohibit spraying solvent into the atmosphere and require the use of covered gun cleaner.

1. If a gun cleaner is being used, connect and clean the gun in the gun cleaner according to the manufactures instructions.
2. If a gun cleaner is not being used:
   Remove air cap and clean separately using clean solvent.
   For pressure setups, connect a pressurized solvent supply to the fluid inlet, trigger the gun allowing solvent to flow thru the gun until clean.

NOTE: Gun head disassembly is not recommended for normal cleaning and maintenance.
Not recommended to soak entire spray gun in solvent.

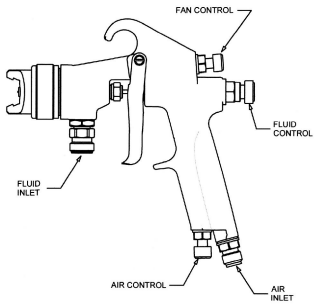

Gun head disassembly and reassembly instructions:

Have repair kit # 10-140 available before gun disassembly.

Disassembly

1. Remove the trigger by removing both screws (19).
2. Remove fluid control knob (11).
3. Remove needle return spring (13) and needle (12).
4. Remove air valve assembly (9) using a 9/16” wrench.
5. Using a 7/16” wrench remove the needle seal cartridge (20).
6. Using a 13 mm wrench remove the side port control (10) and air control (15).
7. Using a 11/16” wrench loosen locknut (18), using a 5/8” wrench remove fluid inlet (17).
8. Remove air cap (1), remove fluid tip (2) using a 3/8” socket.
9. Using a 1” wrench remove head insert (3).

Reassembly

1. Install a new o-ring (7 and 8) on air valve assembly, lightly lubricate o-rings with vasoline and reinstall air valve (9) into the gun body (6).
2. Install a new seal (5) in gun body (6). Install new o-ring (4) on head insert (3). Reinstall head insert into gun body and tighten. Reinstall fluid tip (2) and tighten.
3. Install new seal (5) in gun body. Reinstall and tighten fluid inlet (17). Tighten locknut (18) after fluid inlet has been tightened.
4. Remove the shipping pin from a new needle seal cartridge (20). Install new needle seal cartridge (20).
5. Reinstall side port control (10) and air control (15).
6. Reinstall needle (12), needle return spring (13) and fluid control knob (11).
7. Reinstall air cap (1).

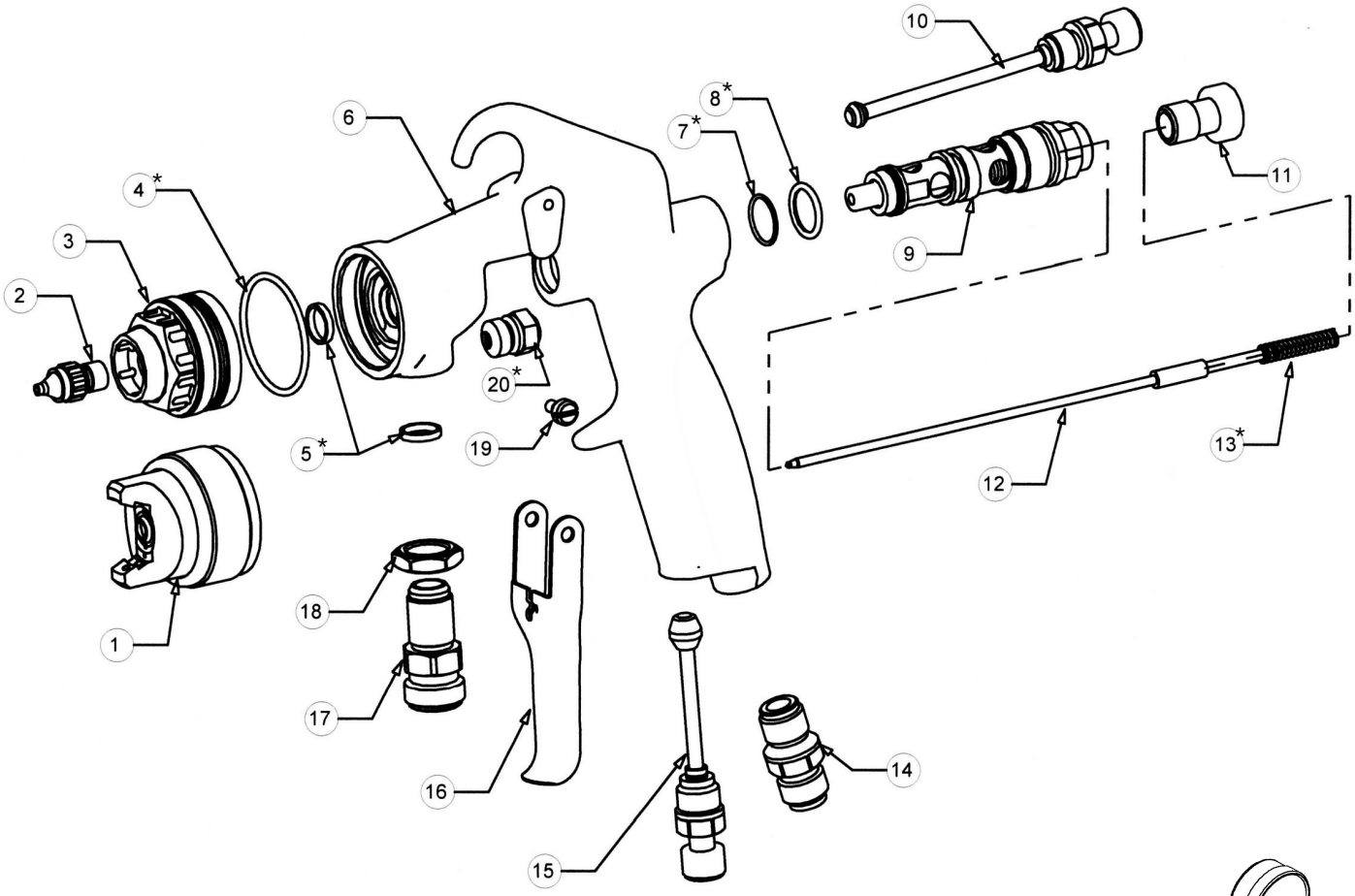

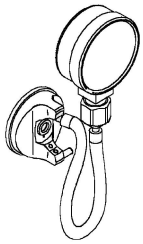

HVLP AIR CAP TEST GAGES	
FOR CPR-FE	23-1301-G

ITEM NO.	PART NO.	DESCRIPTION	ITEM NO.	PART NO.	DESCRIPTION
1	See Air Cap Chart	Air Cap**	11	60-1312	Fluid Control Knob
2	See Air Cap Chart	Fluid Nozzle Tip**	12	See Air Cap Chart	Fluid Needle**
3	60-35	Head Insert	13	60-211	Needle Return Spring*
4	98-8026	O-Ring*	14	60-104	Air Inlet Fitting
5	60-137	O-Ring*	15	60-1319	Air Control
6	60-1301-CPR	Gun Handle	16	60-2111	Trigger
7	98-5125	O-Ring*	17	60-126	Fluid Inlet
8	98-5225	O-Ring*	18	60-128	Locknut
9	60-1320	Air Valve Assembly	19	60-1315	Trigger Pivot Set (2)
10	60-1317	Side Port Control	20	60-1329	Needle Seal Cartridge*

**See air cap selection chart on page 1

*Indicates part included in repair kit # 10-140

FLUID NOZZLE / AIR CAP SELECTION CHARTS

CPR-FE Series - Pressure Feed Guns

CPR-FE HVLP/PRESSURE REDUCED SPRAY GUN

MATERIAL TYPE	FLUID ORIFICE x AIR CAP	MAXIMUM PATTERN WIDTH	CFM
Very Thin less than 16 sec. Zahn #2 inks , dyes, solvents, stains	0.8 mm x 2101 or 1301 1.0 mm x 2101 or 1301	23-2101 13" 23-1301 12"	23-2101 11 CFM 23-1301 13.5 CFM
Thin 16 to 20 sec. Zahn #2 lacquers, enamels, primers, sealers	1.2 mm x 2101 or 1301 1.3 mm x 2101 or 1301	23-2101 13" 23-1301 12"	23-2101 11 CFM 23-1301 13.5 CFM
Medium 21 to 30 sec. Zahn #2 automotive base coat enamels, primers epoxies, urethanes automotive clear coat	1.3 mm x 2101 or 1301 1.4 mm x 2101 or 1301 1.5 mm x 2101 or 1301 1.7 mm x 2101 or 1301	23-2101 13" 23-1301 12"	23-2101 11 CFM 23-1301 13.5 CFM
Heavy over 30 sec. Zahn #2 heavy body primers high solid enamels high solid automotive coatings adhesives	1.7 mm x 2101 or 1301	23-2101 13" 23-1301 12"	23-2101 11 CFM 23-1301 13.5 CFM

CPR-FE Smart Pack Includes:

98-0104	***3/8" Socket***
98-0112	***Ratchet Wrench***
60-8001	***Gun Wrench***
98-0113	***Gun Cleaning Brush***

Air Caps and Needles Shown on Page 1

CPR-FE

CPR-FE-303R2 Includes:

51-303	***1 QT Aluminum Pressure Cup***
52-5R2	***Pressure Cup Regulator***
98-0104	***3/8" Socket***
98-0112	***Ratchet Wrench***
60-8001	***Gun Wrench***
98-0113	***Gun Cleaning Brush***

Air Caps and Needles Shown on Page 1

CPR-FE-PPSR2 Includes:

91-460	***950 mL 3M™ PPS™ Pressure Cup***
91-462	***Lids and Liners (Available in 25 Pack)***
91-475	***#18 PPS Adapter***
52-5R2	***Pressure Cup Regulator***
98-0104	***3/8" Socket***
98-0112	***Ratchet Wrench***
60-8001	***Gun Wrench***
98-0113	***Gun Cleaning Brush***

Air Caps and Needles Shown on Page 1

CPR-FE-303R2

CPR-FE-PPSR2

Revised 11/17/15